Madrid (+34) 91 661 17 17 - **Barcelona (+34) 93 333 36 00 - Bilbao** (+34) 94 671 50 12 - **Sevilla** (+34) 95 545 27 80 - **Lisboa** (+351) 210 993 616

email: valvula-control@iberfluid.com | www.iberfluid.com | Linked in YouTube

Pressure reducing valves

→ Series 481

481

Pressure reducing valves made of stainless steel with threaded connections

SUITABLE FOR

Liquids	neutral and non-neutral
Air, gases and vapours	neutral and non-neutral
Warm water	

EXAMPLES OF USE

For the protection of:
- domestic water supply systems
- commercial and industrial plants

against too high supply pressure.
Pressure reducers are used, if within a piping system despite of varying pressures on the inlet side a certain pressure must not be exceeded on the outlet side.

- potable water supply according to DIN 1988
- process water supply in industrial- and building technology
- snow-making equipment
- fire-fighting equipment and sprinkler systems
- shipbuilding industry and offshore plants
- secondary areas in the food-, pharmaceutical- and cosmetics-industries.

MATERIAL

SPECIFICATION

1/2“ – 2“

–20°C to +120°C

Inlet pressure: up to 40 bar
Outlet pressure: 0,5 to 15 bar
depending on version

APPROVALS

DIN-DVGW type examination (up to 80°C)

Type approval ACS

Type approval WRAS (up to 85°C)

TR ZU 032/2013 - TR ZU 010/2011

Requirements

DIN DVGW guidelines	DIN EN ISO 3822
DIN EN 1567	DGR 2014/68/EU
DIN 1988	

Classification society

DNVGL	DNVGL
Lloyd’s Register EMEA	LR EMEA
American Bureau of Shipping	ABS
Bureau Veritas	BV
Russian Maritime Register of Shipping	RS
Registro Italiano Navale	RINA

MATERIALS

Component	Material	DIN EN	ASME
Inlet body	Stainless steel	1.4408	CF8M
Outlet body	Stainless steel	1.4408	CF8M
Internal parts	Stainless steel	1.4408	CF8M
	Stainless steel	1.4404	316 L
Spring	Spring steel with anti-rust protection	1.1200	ASTM A228
Strainer	Stainless steel	1.4404	316 L

m	with diaphragm	High-quality, heat-resistant moulded elastomere, fabric-reinforced diaphragm. Pressure adjustment by means of non-rising spindle. Valve insert with balanced single seat valve completely made of stainless steel.

Complete valve insert SP/HP (order code: 481 Insert-DN..-seal) available as replacement part can be exchanged without removing the valve.

Complete valve insert LP (order code: 481 LP Insert-DN..-seal) available as replacement part can be exchanged without removing the valve.

Built-in dirt trap made of stainless steel.

Mesh size:	DN 15 to DN 32	0,60 mm
	DN 40 and DN 50	0,75 mm

■ MEDIUM

GF	gaseous and liquid	for water and distilled water, neutral and non-sticking liquids, compressed air and neutral gases; optionally with FPM elastomere seals for non-neutral media i.e. oils, fuels, oil-laden compressed air etc. Not suitable with steam.

■ TYPE OF LIFTING MECHANISM

O	without lifting device

■ OUTLET PRESSURE RANGES

SP	Standard version	Inlet pressure: up to 40 bar	Outlet pressure: from 1 to 8 bar
HP	High-pressure version	Inlet pressure: up to 40 bar	Outlet pressure: from 5 to 15 bar
LP	Low-pressure version	Inlet pressure: up to 25 bar	Outlet pressure: from 0,5 to 2 bar

■ AVAILABLE NOMINAL DIAMETERS AND CONNECTION SIZES

Nominal diameter DN	**15**	**20**	**25**	**32**	**40**	**50**
Inlet	1/2“ (15)	3/4“ (20)	1“ (25)	1 1/4“ (32)	1 1/2“ (40)	2“ (50)
Outlet	1/2“ (15)	3/4“ (20)	1“ (25)	1 1/4“ (32)	1 1/2“ (40)	2“ (50)

■ TYPE OF CONNECTION INLET / OUTLET THREADED CONNECTIONS

BSP-Tm / BSP-Tm	Standard threaded connections	Male thread BSP-T / Male thread BSP-T	DIN EN 10226, ISO 7-1 / DIN EN 10226, ISO 7-1
f / f	Version with female thread available in sizes DN15, DN20 and DN25	Female thread BSP-P / Female thread BSP-P	DIN EN ISO 228-1 / DIN EN ISO 228-1

■ SEALS

EPDM	Ethylene propylene diene	Elastomere moulded diaphragm and seals approvals according to drinking water directive	–20°C to +120°C (up to 8 bar outlet pressure) –20°C to +95°C (from 8 bar outlet pressure)
FKM	Fluorocarbon	Elastomere moulded diaphragm and seals	–10°C to +120°C (up to 8 bar outlet pressure) –10°C to +95°C (from 8 bar outlet pressure)

■ NOMINAL DIAMETERS, CONNECTIONS, INSTALLATION DIMENSIONS

Series 481: Connection, installation dimensions, ranges of adjustment							
Connection	**DN**	**15**	**20**	**25**	**32**	**40**	**50**
Inlet DIN EN 10226	**G1**	1/2"	3/4"	1"	1 1/4"	1 1/2"	2"
Outlet DIN EN 10226	**G2**	1/2"	3/4"	1"			
Inlet pressure SP, HP up to	**bar**	40	40	40	40	40	40
Inlet pressure LP up to	**bar**	25	25	25	25	25	25
Outlet pressure	**bar**	0,5 - 2	0,5 - 2	0,5 - 2	0,5 - 2	0,5 - 2	0,5 - 2
		1 - 8	1 - 8	1 - 8	1 - 8	1 - 8	1 - 8
		5 - 15	5 - 15	5 - 15	5 - 15	5 - 15	5 - 15
Installation dimensions in mm	**L**	142	158	180	193	226	252
	l	80	90	100	105	130	140
	l1	85	95	105			
	H (H1)	102 (128[1])	102 (128[1])	130 (150[1])	130 (150[1])	165 (185[1])	165 (185[1])
	H2 (H3)	124 (150[2])	124(150[2])	161 (181[2])	161 (181[2])	198 (218[2])	198 (218[2])
	h	33	33	45	45	70	70
	SW1	30	37	46	52	65	75
	SW2	28	35	43	48	57	68
Pressure gauge connection Outlet pressure	**G3**	1/4" axial	1/4" axial	1/4" axial	1/4" axial	1/4" axial	1/4" axial
Weight	**kg**	1,2 (1,5[1])	1,3 (1,6[1])	2,3 (2,8[1])	2,5 (3,0[1])	5,2 (5,9[1])	5,7 (6,4[1])
Coefficient of flow K_{VS}[3]	**m³/h**	3	3,5	6,7	7,6	12,5	15

[1]for type 481mGFO-LP
[2]for type 481mGFO-LP S15
[3]The K_{VS} value was determined according to DIN EN 60534-2-3. Instructions on how to determine size and capacity are to be found under section 2.

■ MAIN DIMENSIONS, INSTALLATION DIMENSIONS

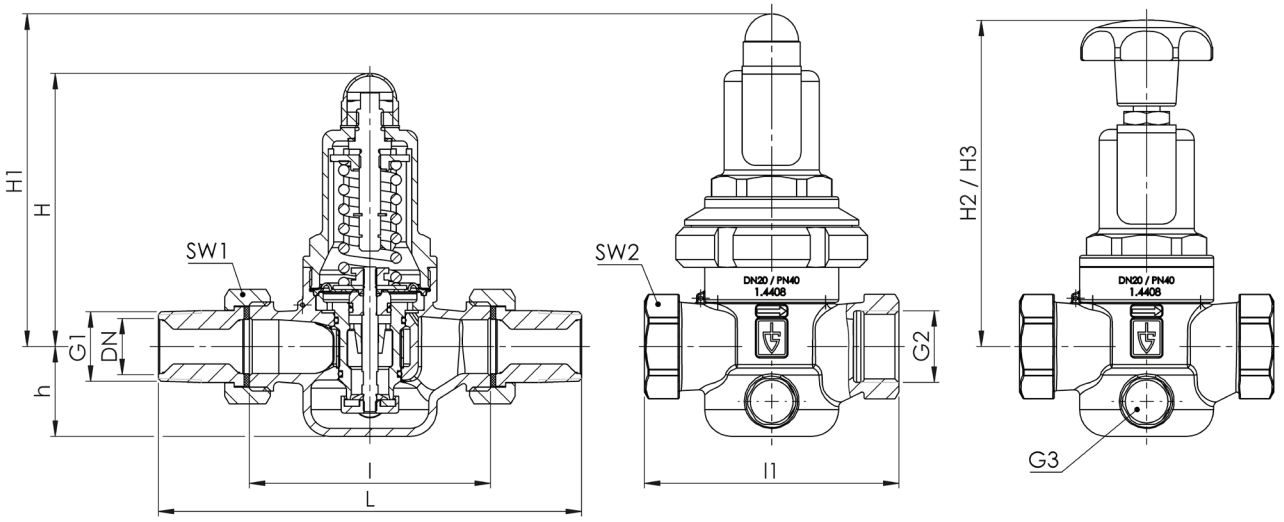

Series 481 ■ INDIVIDUAL SELECTION / VALVE CONFIGURATION

Series	Valve version	Medium	Lifting device	Outlet pressure	Nominal diameter DN	Connection type		Connection size		Seal	Options	Optional: fixed setting	Quan-tity
						Inlet	Outlet	Inlet	Outlet				
481	m	GF	O	*SP*	*25*	*BSP-T m*	*BSP-T m*	*25*	*25*	*EPDM*	*Manometer 41*		*5*
481	m	GF	O	*SP*	*15*	*f*	*f*	*15*	*15*	*EPDM*			*4*
481	m	GF	O										
481	m	GF	O										

■ PROPERTIES

S15	Hand wheel (plastic) for tool-free setting of setpressure[1]	☐		☐
S17	Supply with manometers suitable for the valve finish	☐		☐
S71	Preliminary setup for protection against manipulation of the preset pressure (seal)	☐		☐

[1]For nominal diameters DN15 to DN50 outlet pressure ranges LP and SP

■ OPTIONS

GOX	Especially for gaseous O2 applications by employment of specific materials including oil- and grease free production process	☐		☐
P01	Oil- and grease-free production	☐		☐
FE	Setting and sealing	☐		☐

■ CERTIFICATES / APPROVALS

C01	Factory certificate acc. DIN EN 10204 2.2 (WKZ 2.2)	☐	C05	Sealing material Manufacturer certification (FDA, USP 3, 3-A,…), Please indicate description of certificate:.....	☐
C02	Test certificate acc. DIN EN 10204 3.1 (WPZ 3.1)	☐	C06	ATEX evaluation acc. to 2014/34/EU	☐
C03	Material test certificate acc. DIN EN 10204 3.1 (MPZ 3.1) (pressure retaining part)	☐	C10	Certificate of oil- and grease free production	☐
C04	TÜV/DEKRA individual inspection acc. EN 10204 3.2 (TÜV/DEKRA-APZ)	☐			☐

■ ADMISSIONS / ACCREDITATIONS

AA1	EC Type examination acc. to Directive 2014/68/EU	☒	AK1	DNV-GL (DNVGL) type approval	☐
AA4	EAC - certificate/declaration with passport for the valve and laser marking of the valve	☐	AK2	Lloyd's Register (LR) type approval	☐
AB1	Deutscher Verein des Gas- und Wasserfaches, DVGW type approval	☐	AK3	American Bureau of Shipping (ABS) type approval	☐
AB2	Water regulations and advisory scheme WRAS type approval	☐	AK4	Bureau Veritas (BV) type approval	☐
AB3	Attestation de Conformité Sanitaire, ACS type approval	☐	AK5	Russian Maritime Register of Shipping (RMRS) type approval	☐
		☐	AK6	Registro Italiano Navale (RINA) type approval	☐
		☐	AL	Individual inspection by notified body inspector – (body to be indicated):	☐

■ ENQUIRY

Copy and send to: order@goetze-armaturen.de.

Order form easily to be found online under the section for each series.

Series 481:

Dimensioning by pressure loss on the outlet pressure side

Flow chart water

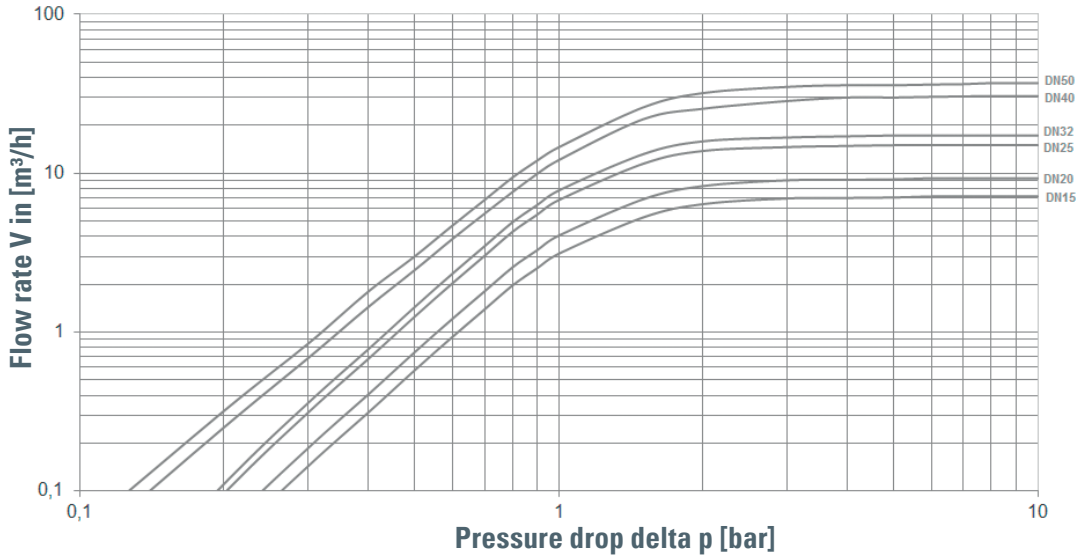

Dimensioning by flow velocity

For Liquids:
With help of the chart you can determine the nominal diameter (DN) for a given flow volume V (m³/h). According to DVGW-guidelines (DIN 1988) a flow velocity of 2 m/s in domestic water supply systems should not be exceeded.

For compressed air and other gaseous media:
The usual flow velocity for compressed air is 10 - 20 m/s. For gaseous media the flow volume V should always be shown in actual cubic meters/hour. If the flow volume is given in standard cubic meters, these should be converted into actual cubic meters before using the diagram.

$$V\,(m^3/h) = \frac{V_{Norm}\,(Nm^3/h)}{p_{absolut}\,(bar)} = \frac{V_{Norm}}{p_{ü}+1}$$

Actual cubic meters are based on the prevailing pressure of the medium on the outlet side of the pressure reducer.

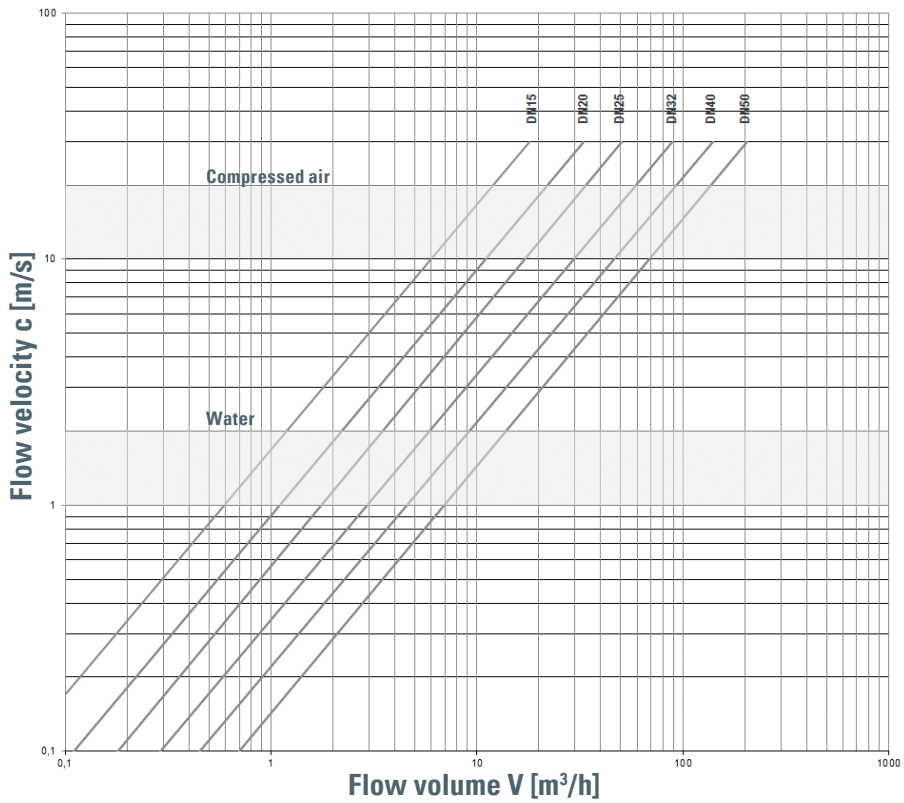

→ Series 681

SUITABLE FOR

Liquids	neutral and non-neutral
Air, gases and vapours	neutral and non-neutral
Warm water	

EXAMPLES OF USE

For the protection of:
- domestic water supply systems
- commercial and industrial plants

against too high supply pressure.
Pressure reducers are used, if within a piping system despite of varying pressures on the inlet side a certain pressure must not be exceeded on the outlet side.

- potable water supply according to DIN 1988
- process water supply in industrial-and building technology
- snow-making equipment
- fire-fighting equipment and sprinkler systems
- shipbuilding industry and offshore plants

APPROVALS

DIN-DVGW type examination (up to 80°C)

Type approval ACS

Type approval WRAS (up to 85°C)

TR ZU 032/2013 - TR ZU 010/2011

Requirements

DIN DVGW guidelines	DIN EN ISO 3822
DIN EN 1567	DGR 2014/68/EU
DIN 1988	

Classification society

DNVGL	DNVGL
Lloyd's Register EMEA	LR EMEA
American Bureau of Shipping	ABS
Bureau Veritas	BV
Russian Maritime Register of Shipping	RS
Registro Italiano Navale	RINA

MATERIAL

SPECIFICATION

1/2" – 2"

–20°C to + 120°C

Inlet pressure: up to 40 bar
Outlet pressure: 0,5 to 15 bar
depending on version

MATERIALS

Component	Material	DIN EN	ASME
Inlet body	Gunmetal	CC499K	CC499K
Outlet body	Gunmetal	CC499K	CC499K
Internal parts	Gunmetal	CC499K	CC499K
	Stainless Steel	1.4404	316 L
Spring	Spring steel with anti-rust protection	1.1200	ASTM A228
Strainer	Stainless Steel	1.4404	316 L

m	with diaphragm	High-quality, heat-resistant moulded elastomere, fabric-reinforced diaphragm. Adjustment by means of non-rising spindle. Insert with balanced single seat valve made of gunmetal.

Complete valve insert SP/HP (order code: 681 Insert-DN..-seal) available as replacement part can be exchanged without removing the valve.

Complete valve insert LP (order code: 681 LP Insert-DN..-seal) available as replacement part can be exchanged without removing the valve.

Built-in dirt trap made of stainless steel.

Mesh size:	DN 15 to DN 32	0,60 mm
	DN 40 and DN 50	0,75 mm

■ MEDIUM

GF	gaseous and liquid	for water, neutral and non-sticking liquids, compressed air and neutral gases; optionally with FPM elastomere seals for non-neutral media i.e. oils, fuels, oil-laden compressed air, etc. Not suitable with steam.

■ TYPE OF LIFTING MECHANISM

0	without lifting device

■ OUTLET PRESSURE RANGES

SP	Standard version	Inlet pressure: up to 40 bar	Outlet pressure: from 1 to 8 bar
HP	High-pressure version	Inlet pressure: up to 40 bar	Outlet pressure: from 5 to 15 bar
LP	Low-pressure version	Inlet pressure: up to 25 bar	Outlet pressure: from 0,5 to 2 bar

■ AVAILABLE NOMINAL DIAMETERS AND CONNECTION SIZES

Nominal diameter DN	**15**	**20**	**25**	**32**	**40**	**50**
Inlet	1/2“ (15)	3/4“ (20)	1“ (25)	1 1/4“ (32)	1 1/2“ (40)	2“ (50)
Outlet	1/2“ (15)	3/4“ (20)	1“ (25)	1 1/4“ (32)	1 1/2“ (40)	2“ (50)

■ TYPE OF CONNECTION INLET / OUTLET THREADED CONNECTIONS

BSP-Tm / BSP-Tm	Standard threaded connections	Male thread BSP-T / Male thread BSP-T	DIN EN 10226, ISO 7-1 / DIN EN 10226, ISO 7-1
f / f	Version with female thread available in sizes DN15, DN20 and DN25	Female thread BSP-P / Female thread BSP-P	DIN EN ISO 228-1 / DIN EN ISO 228-1

■ SEALS

EPDM	Ethylene propylene diene	Elastomere moulded diaphragm and seals approvals according to drinking water directive	–20°C to +120°C (up to 8 bar outlet pressure) –20°C to +95°C (from 8 bar outlet pressure)
FKM	Fluorocarbon	Elastomere moulded diaphragm and seals	–10°C to +120°C (up to 8 bar outlet pressure) –10°C to +95°C (from 8 bar outlet pressure)

NOMINAL DIAMETERS, CONNECTIONS, INSTALLATION DIMENSIONS

Series 681: Connection, installation dimensions, ranges of adjustment							
Connection	**DN**	**15**	**20**	**25**	**32**	**40**	**50**
Inlet DIN EN 10226	**G1**	1/2"	3/4"	1"	1 1/4"	1 1/2"	2"
Outlet DIN EN 10226	**G2**	1/2"	3/4"	1"			
Inlet pressure SP, HP up to	**bar**	40	40	40	40	40	40
Inlet pressure LP up to	**bar**	25	25	25	25	25	25
Outlet pressure	**bar**	0,5 - 2	0,5 - 2	0,5 - 2	0,5 - 2	0,5 - 2	0,5 - 2
		1 - 8	1 - 8	1 - 8	1 - 8	1 - 8	1 - 8
		5 - 15	5 - 15	5 - 15	5 - 15	5 - 15	5 - 15
Installation dimensions in mm	**L**	142	158	180	193	226	252
	l	80	90	100	105	130	140
	l1	85	95	105			
	H (H1)	102 (128[1])	102 (128[1])	130 (150[1])	130 (150[1])	165 (185[1])	165 (185[1])
	H2 (H3)	124 (150[2])	124(150[2])	161 (181[2])	161 (181[2])	198 (218[2])	198 (218[2])
	h	33	33	45	45	70	70
	SW1	30	37	46	52	65	75
	SW2	28	35	43			
Pressure gauge connection Outlet pressure	**G3**	1/4" axial	1/4" axial	1/4" axial	1/4" axial	1/4" axial	1/4" axial
Weight	**kg**	1,2 (1,5[1])	1,3 (1,6[1])	2,4 (2,9[1])	2,6 (3,1[1])	5,5 (6,2[1])	6,0 (6,7[1])
Coefficient of flow K_{vs}[3]	**m³/h**	3	3,5	6,7	7,6	12,5	15

[1]for type 681mGFO-LP
[2]for type 681mGFO-LP S15
[3]The K_{vs} value was determined according to DIN EN 60534-2-3. Instructions on how to determine size and capacity are to be found under section 2.

MAIN DIMENSIONS, INSTALLATION DIMENSIONS

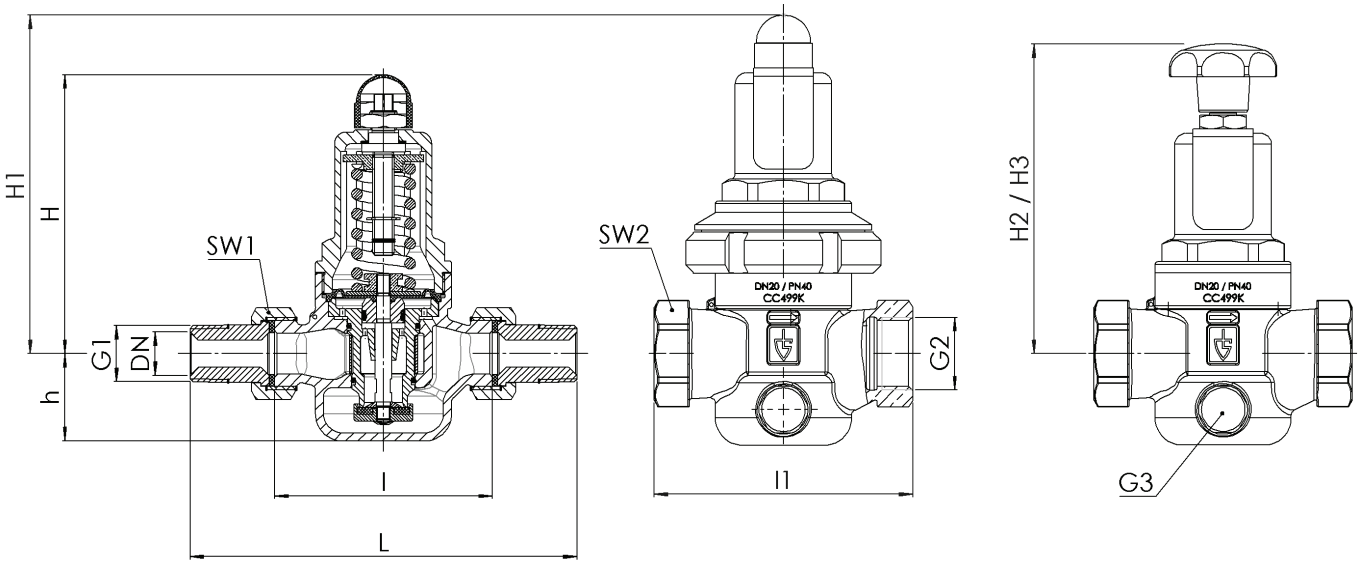

Series 681 ■ INDIVIDUAL SELECTION / VALVE CONFIGURATION

Series	Valve version	Medium	Lifting device	Outlet pressure	Nominal diameter DN	Connection type		Connection size		Seal	Options	Optional: fixed setting	Quan-tity
						Inlet	Outlet	Inlet	Outlet				
681	m	GF	O	*SP*	*20*	*BSP-T m*	*BSP-T m*	*20*	*20*	*EPDM*	*Manometer 36*		*8*
681	m	GF	O	*SP*	*15*	*f*	*f*	*15*	*15*	*EPDM*			*4*
681	m	GF	O										
681	m	GF	O										

■ PROPERTIES

S15	Hand wheel (plastic) for tool-free setting of setpressure[1]	☐			☐
S17	Supply with manometers suitable for the valve finish	☐			☐
S71	Preliminary setup for protection against manipulation of the preset pressure (seal)	☐			☐

[1]For nominal diameters DN15 to DN50 outlet pressure ranges LP and SP

■ OPTIONS

GOX	Especially for gaseous O2 applications by employment of specific materials including oil- and grease free production process	☐	P03	Galvanically nickel-plated finish	☐
P01	Oil- and grease-free production	☐	FE	Setting and sealing	☐
P02	Chemically nickel-plated finish	☐			☐

■ CERTIFICATES / APPROVALS

C01	Factory certificate acc. DIN EN 10204 2.2 (WKZ 2.2)	☐	C05	Sealing material Manufacturer certification (FDA, USP 3, 3-A,…), Please indicate description of certificate:.....	☐
C02	Test certificate acc. DIN EN 10204 3.1 (WPZ 3.1)	☐	C06	ATEX evaluation acc. to 2014/34/EU	☐
C03	Material test certificate acc. DIN EN 10204 3.1 (MPZ 3.1) (pressure retaining part)	☐	C10	Certificate of oil- and grease free production	☐
C04	TÜV/DEKRA individual inspection acc. EN 10204 3.2 (TÜV/DEKRA-APZ)	☐			☐

■ ADMISSIONS / ACCREDITATIONS

AA1	EC Type examination acc. to Directive 2014/68/EU	☒	AK1	DNV-GL (DNVGL) type approval	☐
AA4	EAC - certificate/declaration with passport for the valve and laser marking of the valve	☐	AK2	Lloyd's Register (LR) type approval	☐
AB1	Deutscher Verein des Gas- und Wasserfaches, DVGW type approval	☐	AK3	American Bureau of Shipping (ABS) type approval	☐
AB2	Water regulations and advisory scheme WRAS type approval	☐	AK4	Bureau Veritas (BV) type approval	☐
AB3	Attestation de Conformité Sanitaire, ACS type approval	☐	AK5	Russian Maritime Register of Shipping (RMRS) type approval	☐
AB4	Stiftelsen for industriell og teknisk forskning, SINTEF type approval	☐	AK6	Registro Italiano Navale (RINA) type approval	☐
		☐	AL	Individual inspection by notified body inspector – (body to be indicated):	☐

■ ENQUIRY

Copy and send to: order@goetze-armaturen.de.

Order form easily to be found online under the section for each series.

Series 681:

Dimensioning by pressure loss on the outlet pressure side

Flow chart water

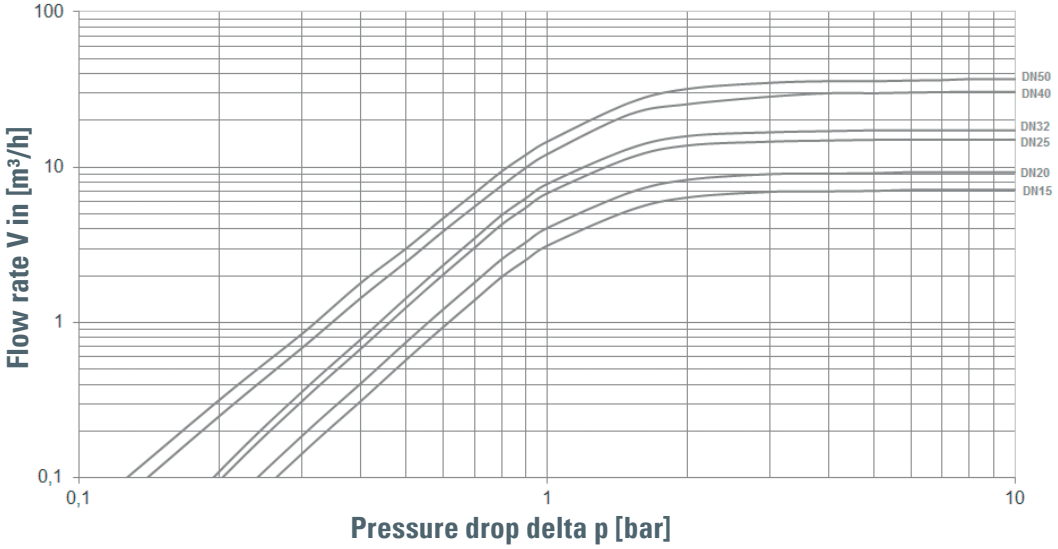

Dimensioning by flow velocity

For liquids:
With help of the chart you can determine the nominal diameter (DN) for a given flow volume V (m³/h). According to DVGW-guidelines (DIN 1988) a flow velocity of 2 m/s in domestic water supply systems should not be exceeded.

For compressed air and other gaseous media:
The usual flow velocity for compressed air is 10 - 20 m/s. For gaseous media the flow volume V should always be shown in actual cubic meters/hour. If the flow volume is given in standard cubic meters, these should be converted into actual cubic meters before using the diagram.

$$V\,(m^3/h) = \frac{V_{Norm}\,(Nm^3/h)}{p_{absolut}\,(bar)} = \frac{V_{Norm}}{p_{\ddot{u}}+1}$$

Actual cubic meters are based on the prevailing pressure of the medium on the outlet side of the pressure reducer.

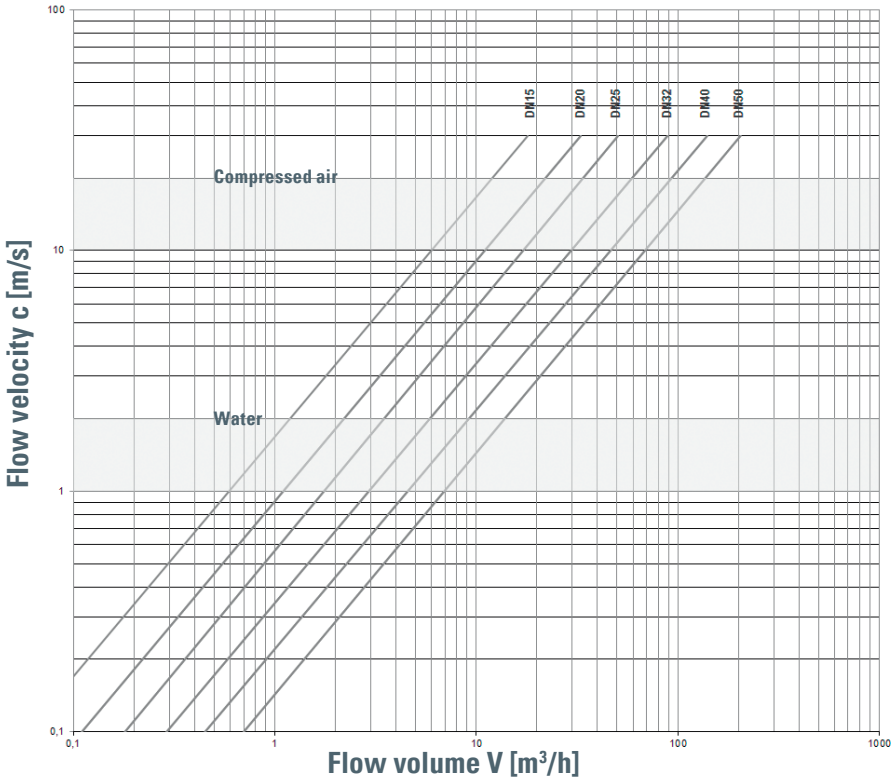

→ Series 482

482

Pressure reducing valves made of stainless steel with flange connections

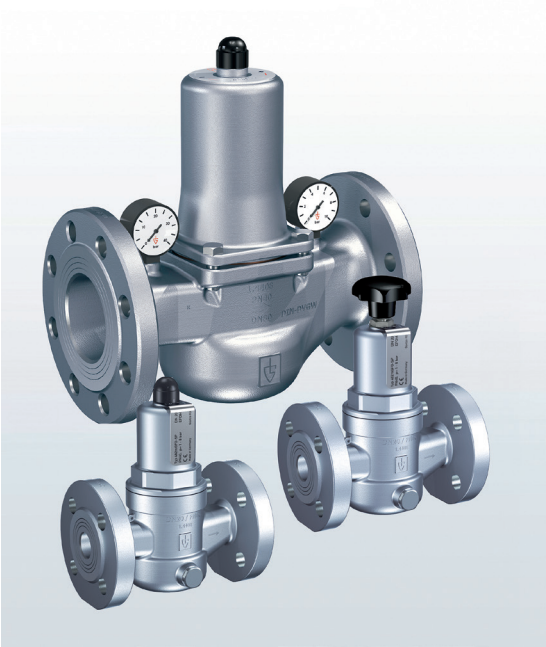

SUITABLE FOR

Liquids	neutral and non-neutral
Air, gases and vapours	neutral and non-neutral
Warm water	

EXAMPLES OF USE

For the protection of:
- domestic water supply systems
- commercial and industrial plants

against too high supply pressure.
Pressure reducers are used, if within a piping system despite of varying pressures on the inlet side a certain pressure must not be exceeded on the outlet side.

- potable water supply according to DIN 1988
- process water supply in industrial- and building technology
- fire-fighting equipment and sprinkler systems
- shipbuilding industry and offshore plants
- secondary areas in the food-, pharmaceutical- and cosmetics industries

APPROVALS

DIN-DVGW type examination (up to 80°C)

Type approval ACS

Type approval WRAS (up to 85°C)

TR ZU 032/2013 - TR ZU 010/2011

Requirements

DIN DVGW guidelines	DIN EN ISO 3822
DIN EN 1567	DGR 2014/68/EU
DIN 1988	

Classification society

DNVGL	DNVGL
Lloyd's Register EMEA	LR EMEA
American Bureau of Shipping	ABS
Bureau Veritas	BV
Russian Maritime Register of Shipping	RS
Registro Italiano Navale	RINA

MATERIAL

SPECIFICATION

DN 15 to DN 100 – 20°C to + 120°C

Inlet pressure: up to 40 bar
Outlet pressure: 0,5 to 15 bar
depending on version

MATERIALS

Component	Material	DIN EN	ASME
Inlet body	Stainless steel	1.4408	CF8M
Outlet body	Stainless steel	1.4408	CF8M
Internal parts	Stainless steel	1.4408	CF8M
	Stainless steel	1.4404	316 L
Spring	Spring steel with anti-rust protection	1.1200	ASTM A228
Strainer	Stainless steel	1.4404	316 L

m	with diaphragm	High-quality, heat-resistant moulded elastomere, fabric-reinforced diaphragm. Pressure adjustment by means of non-rising spindle. Valve insert with balanced single seat valve completely made of stainless steel. Valve insert with fully balanced seat, in sizes DN 15 up to DN 50 made of gunmetal and stainless steel, from DN65 up to DN100 made of stainless steel.
k	with piston	Stainless steel piston (only for DN 100) Adjustment by means of non-rising spindle. Balanced single seat valve.

Complete valve cartridge SP/HP (order code: 482 Insert-DN..-seal) available as replacement part can be exchanged without removing the valve.

Complete valve cartridge LP (order code: 482 LP Insert-DN..-seal) available as replacement part can be exchanged without removing the valve.

Built-in dirt trap made of stainless steel.

Mesh size:	DN 15 to DN 32	0,60 mm
	DN 40 to DN 100	0,75 mm

■ MEDIUM

GF	gaseous and liquid	for water and distilled water, neutral and non-sticking liquids, compressed air and neutral gases; optionally with FPM elastomere seals for non-neutral media i.e. oils, fuels, oil-laden compressed air etc. Not suitable for steam.

■ TYPE OF LIFTING MECHANISM

0	without lifting device

■ OUTLET PRESSURE RANGES

SP	Standard version	Inlet pressure: up to 16 bar (PN 16) or 40 bar (PN 40)	Outlet pressure: from 1 to 8 bar
HP	High-pressure version (not for DN 65 and DN 80)	Inlet pressure: up to 16 bar (PN 16) or 40 bar (PN 40)	Outlet pressure: from 5 to 15 bar (5 to 13 bar, DN 100 with piston)
LP	Low-pressure version (not for DN 65, DN 80 and DN 100)	Inlet pressure: up to 25 bar	Outlet pressure: from 0,5 to 2 bar

■ AVAILABLE NOMINAL DIAMETERS AND CONNECTION SIZES

Nominal diameter DN	**15**	**20**	**25**	**32**	**40**	**50**	**65**	**80**	**100**
Inlet / Outlet	15/15	20/20	25/25	32/32	40/40	50/50	65/65	80/80	100/100
	■	■	■	■	■	■	■	■	■

■ TYPE OF CONNECTION INLET / OUTLET FLANGE CONNECTIONS

FL / FL	Standard	Flange connection / flange connection	DIN EN 1092 / DIN EN 1092

■ SEALS

EPDM	Ethylene propylene diene	Elastomere moulded diaphragm and seals approvals according to drinking water directive	–20°C to +120°C (up to 8 bar outlet pressure) –20°C to +95°C (from 8 bar outlet pressure)
FKM	Fluorocarbon	Elastomere moulded diaphragm and seals	–10°C to +120°C (up to 8 bar outlet pressure) –10°C to +95°C (from 8 bar outlet pressure)

NOMINAL DIAMETERS, CONNECTIONS, INSTALLATION DIMENSIONS

Series 482: Connection, installation dimensions, ranges of adjustment

Connection		DN15 PN40	DN20 PN40	DN25 PN40	DN32 PN40	DN40 PN40	DN50 PN40	DN65 PN16	DN65 PN40	DN80 PN40	DN100 PN16
Inlet pressure SP, HP up to	bar	40	40	40	40	40	40	16	40	40	16
Inlet pressure LP up to	bar	25	25	25	25	25	25				
Outlet pressure	bar	0,5 – 2 1 – 8 5 – 15	0,5 – 2 1 – 8 5 – 15	0,5 – 2 1 – 8 5 – 15	0,5 – 2 1 – 8 5 – 15	0,5 – 2 1 – 8 5 – 15	0,5 – 2 1 – 8 5 – 15	1 – 8	1 – 8	1 – 8	1 – 8 5 – 13
Installation dimensions in mm	D	95	105	115	140	150	165	185	185	200	220
	L	130	150	160	180	200	230	290	290	310	350
	H (H1)	102 (128[1])	130 (150[1])	130 (150[1])	130 (150[1])	165 (185[1])	165 (185[1])	235	235	235	320 (340[3])
	H2 (H3)	124 (150[2])	161 (181[2])	161 (181[2])	161 (181[2])	198 (218[2])	198 (218[2])				
	h	46	50	55	68	73	80	89	89	96	112
	K /nxd	65 / 4xM12	75 / 4xM12	85 / 4xM12	100 / 4xM16	110 / 4xM16	125 / 4xM16	145 / 4xM16	145 / 8xM16	160 / 8xM16	180 / 8xM16
Pressure gauge connections											
Inlet pressure	G1							1/4“ radial	1/4“ radial	1/4“ radial	1/4“ axial
Outlet pressure	G1	1/4“ axial	1/4“ axial	1/4“ axial	1/4“ axial	1/4“ axial	1/4“ axial	1/4“ radial	1/4“ radial	1/4“ radial	1/4“ axial
Weight	kg	2,7 (2,9[1])	3,9 (4,3[1])	4,3 (4,7[1])	5,5 (5,9[1])	8,4 (9,1[1])	10,2 (10,9[1])	18,7	19	20,5	37 (40[3])
Coefficient of flow K_{vs}[4]	m³/h	3	5,8	6,7	7,6	12,5	15	40	40	50	80

[1]for type 482mGFO-LP
[2]for type 482mGFO-LP S15
[3]for type 482kGFO-HP
[4]The K_{vs} value was determined according to DIN EN 60534-2-3. Instructions on how to determine size and capacity are to be found under section 2.

MAIN DIMENSIONS, INSTALLATION DIMENSIONS

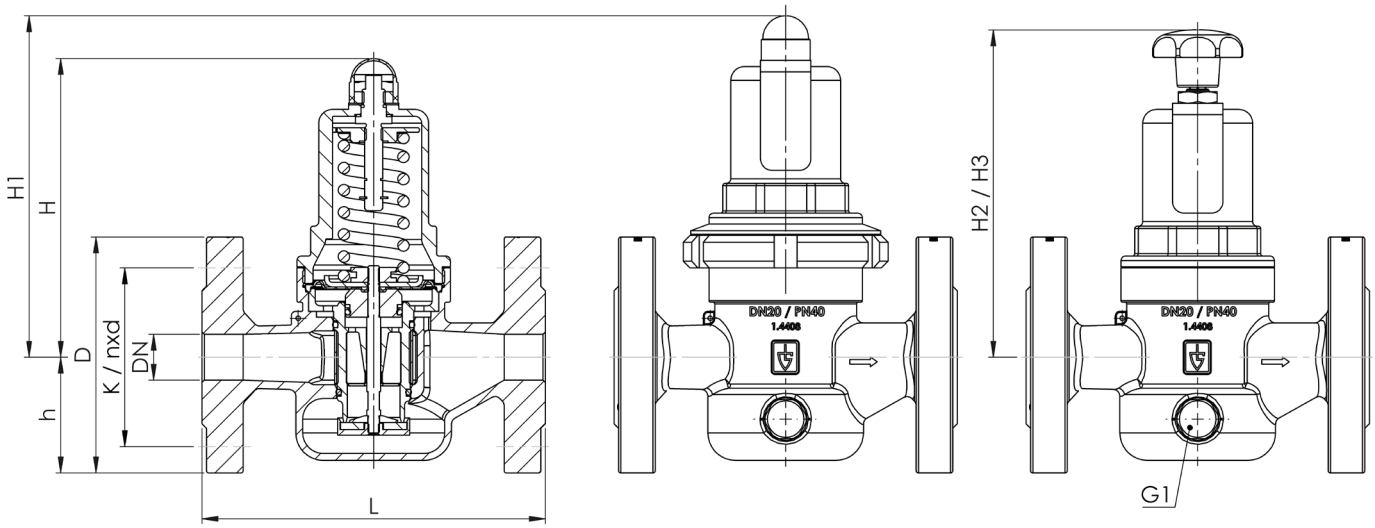

Series 482 ■ INDIVIDUAL SELECTION / VALVE CONFIGURATION

Series	Valve version	Medium	Lifting device	Outlet pressure	Nominal diameter DN	Connection type		Connection size		Seal	Options	Optional: fixed setting	Quan-tity
						Inlet	Outlet	Inlet	Outlet				
482	m	GF	O	*HP*	*50*	FL	FL	*50*	*50*	*EPDM*			*5*
482	k	GF	O	*HP*	*100*	FL	FL	*100*	*100*	*FKM*	*S71*	*7*	*2*
482		GF	O			FL	FL						
482		GF	O			FL	FL						

■ PROPERTIES

S15	Hand wheel (plastic) for tool-free setting of setpressure[1]	☐		☐
S17	Supply with manometers suitable for the valve finish	☐		☐
S71	Preliminary setup for protection against manipulation of the preset pressure (seal)	☐		☐

[1]For nominal diameters DN15 to DN50 outlet pressure ranges LP and SP

■ OPTIONS

GOX	Especially for gaseous O2 applications by employment of specific materials including oil- and grease free production process	☐		☐
P01	Oil- and grease-free production	☐		☐
FE	Setting and sealing	☐		☐

■ CERTIFICATES / APPROVALS

C01	Factory certificate acc. DIN EN 10204 2.2 (WKZ 2.2)	☐	C05	Sealing material Manufacturer certification (FDA, USP 3, 3-A,…), Please indicate description of certificate:.....	☐
C02	Test certificate acc. DIN EN 10204 3.1 (WPZ 3.1)	☐	C06	ATEX evaluation acc. to 2014/34/EU	☐
C03	Material test certificate acc. DIN EN 10204 3.1 (MPZ 3.1) (pressure retaining part)	☐	C10	Certificate of oil- and grease free production	☐
C04	TÜV/DEKRA individual inspection acc. EN 10204 3.2 (TÜV/DEKRA-APZ)	☐			☐

■ ADMISSIONS / ACCREDITATIONS

AA1	EC Type examination acc. to Directive 2014/68/EU	☒	AK1	DNV-GL (DNVGL) type approval	☐
AA4	EAC - certificate/declaration with passport for the valve and laser marking of the valve	☐	AK2	Lloyd's Register (LR) type approval	☐
AB1	Deutscher Verein des Gas- und Wasserfaches, DVGW type approval	☐	AK3	American Bureau of Shipping (ABS) type approval	☐
AB2	Water regulations and advisory scheme WRAS type approval	☐	AK4	Bureau Veritas (BV) type approval	☐
AB3	Attestation de Conformité Sanitaire, ACS type approval	☐	AK5	Russian Maritime Register of Shipping (RMRS) type approval	☐
		☐	AK6	Registro Italiano Navale (RINA) type approval	☐
		☐	AL	Individual inspection by notified body inspector – (body to be indicated):	☐

■ ENQUIRY

Copy and send to: order@goetze-armaturen.de.

Order form easily to be found online under the section for each series.

Series 482:

Dimensioning by pressure loss on the outlet pressure side

Flow chart water

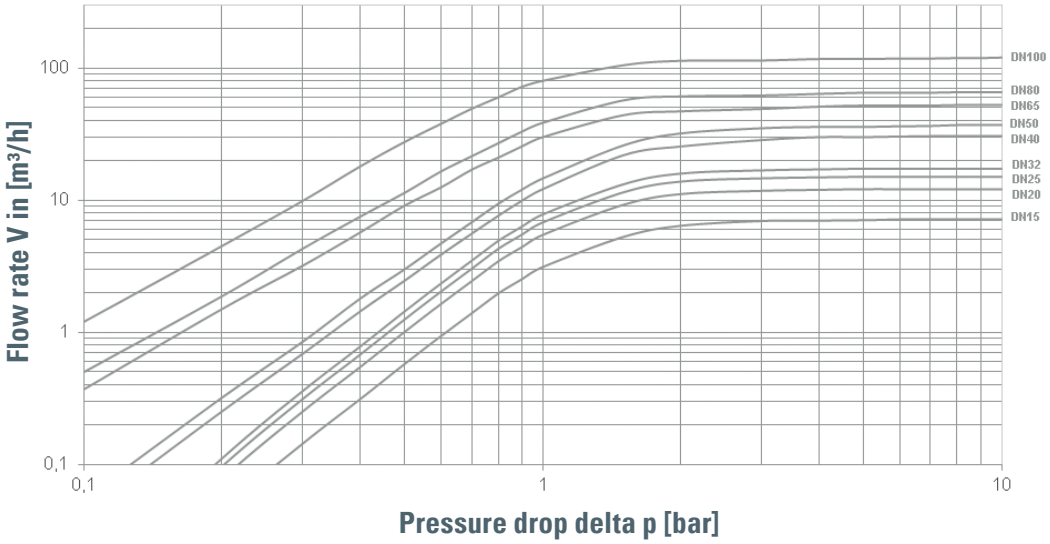

Dimensioning by flow velocity

For Liquids:
With help of the chart you can determine the nominal diameter (DN) for a given flow volume V (m³/h). According to DVGW-guidelines (DIN 1988) a flow velocity of 2 m/s in domestic water supply systems should not be exceeded.

For compressed air and other gaseous media:
The usual flow velocity for compressed air is 10 - 20 m/s. For gaseous media the flow volume V should always be shown in actual cubic meters/hour. If the flow volume is given in standard cubic meters, these should be converted into actual cubic meters before using the diagram.

$$V\,(m^3/h) = \frac{V_{Norm}\,(Nm^3/h)}{p_{absolut}\,(bar)} = \frac{V_{Norm}}{p_{ü}+1}$$

Actual cubic meters are based on the prevailing pressure of the medium on the outlet side of the pressure reducer.

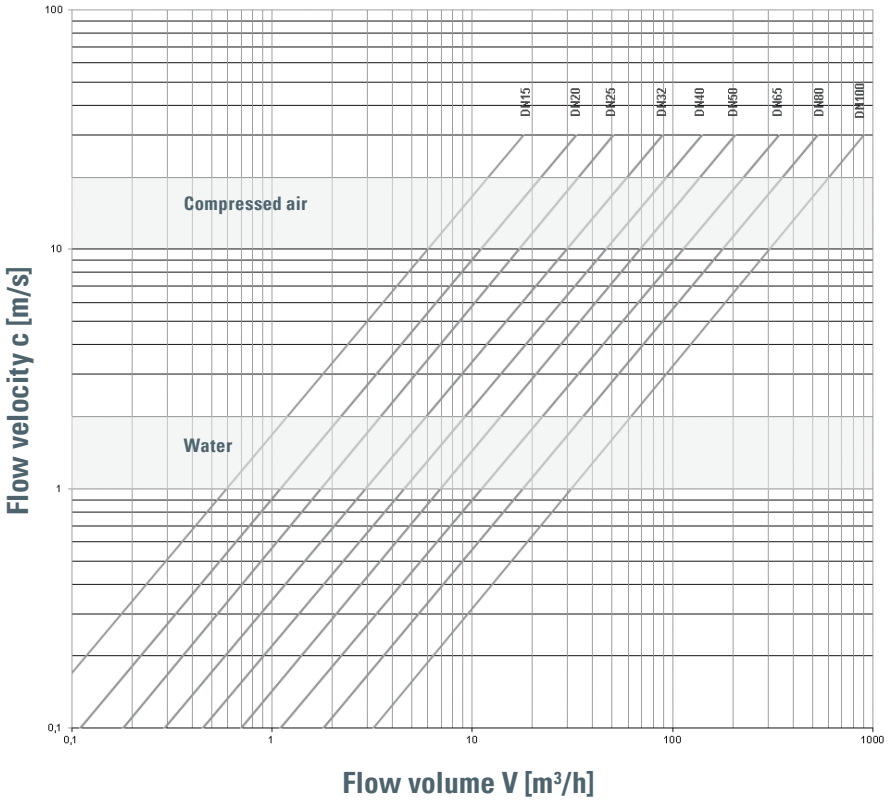

→ Series 682

682

Pressure reducing valves made of gunmetal with flange connections

SUITABLE FOR

Liquids	neutral and non-neutral
Air, gases and vapours	neutral and non-neutral
Warm water	

EXAMPLES OF USE

For the protection of:
- domestic water supply systems
- commercial and industrial plants

against an excess supply pressure.
Pressure reducers are used, if within a piping system despite of varying pressures on the inlet side a certain pressure must not be exceeded on the outlet side.

- potable water supply according to DIN 1988
- process water supply in industrial- and building technology applications
- fire-fighting equipment and sprinkler systems
- shipbuilding industry and offshore plants

MATERIAL

SPECIFICATION

DN 15 to DN 100

– 20°C to + 120°C

Inlet pressure: up to 40 bar
Outlet pressure: 0,5 to 15 bar
depending on version

APPROVALS

DIN-DVGW type examination (up to 80°C)

Type approval ACS

Type approval WRAS (up to 85°C)

TR ZU 032/2013 - TR ZU 010/2011

Requirements

DIN DVGW guidelines	DIN EN ISO 3822
DIN EN 1567	DGR 2014/68/EU
DIN 1988	

Classification society

DNVGL	DNVGL
Lloyd's Register EMEA	LR EMEA
American Bureau of Shipping	ABS
Bureau Veritas	BV
Russian Maritime Register of Shipping	RS
Registro Italiano Navale	RINA

MATERIALS

Component	Material	DIN EN	ASME
Inlet body	Gunmetal	CC499K	CC499K
Outlet body	Gunmetal	CC499K	CC499K
Inner parts, wetted	Gunmetal	CC499K	CC499K
	Stainless Steel	1.4404	316 L
Spring	Spring steel with anti-rust protection	1.1200	ASTM A228
Strainer	Stainless Steel	1.4404	316 L

Series 682 ■ VALVE VERSION

m	with diaphragm	High-quality, heat-resistant moulded elastomere, fabric-reinforced diaphragm. Pressure adjustment by means of non-rising spindle. Valve insert with balanced single seat valve completely made of stainless steel.
k	with piston	Stainless steel piston (only for DN 100) Adjustment by means of non-rising spindle. Balanced single seat valve.

Complete valve cartridge SP/HP (order code: 482 Insert-DN..-seal) available as replacement part can be exchanged without removing the valve.

Complete valve cartridge LP (order code: 482 LP Insert-DN..-seal) available as replacement part can be exchanged without removing the valve.

Built-in dirt trap made of stainless steel.

Mesh size:	DN 15 to DN 32	0,60 mm
	DN 40 to DN 80	0,75 mm

■ MEDIUM

GF	gaseous and liquid	for water, neutral and non-sticking liquids, compressed air and neutral gases; optionally with FPM elastomere seals for non-neutral media i.e. oils, fuels, oil-laden compressed air, etc. Not suitable with steam.

■ TYPE OF LIFTING MECHANISM

O	without lifting device

■ OUTLET PRESSURE RANGES

SP	Standard version	Inlet pressure: up to 16 bar (PN 16) or 40 bar (PN 40)	Outlet pressure: from 1 to 8 bar
HP	High-pressure version (not for DN 65 and DN 80)	Inlet pressure: up to 16 bar (PN 16) or 40 bar (PN 40)	Outlet pressure: from 5 to 15 bar (5 to 13 bar, DN 100 with piston)
LP	Low-pressure version (not for DN 65, DN 80 and DN 100)	Inlet pressure: up to 16 bar (PN 16) or 25 bar (PN 40)	Outlet pressure: from 0,5 to 2 bar

■ AVAILABLE NOMINAL DIAMETERS AND CONNECTION SIZES

Nominal diameter DN	**15**	**20**	**25**	**32**	**40**	**50**	**65**	**80**	**100**
Inlet / Outlet	15/15	20/20	25/25	32/32	40/40	50/50	65/65	80/80	100/100
	■	■	■	■	■	■	■	■	■

■ TYPE OF CONNECTION INLET / OUTLET FLANGE CONNECTIONS

FL / FL	Standard	Flange connection / flange connection	DIN EN 1092 / DIN EN 1092

■ SEALS

EPDM	Ethylene propylene diene	Elastomere moulded diaphragm and seals approvals according to drinking water directive	–20°C to +120°C (up to 8 bar outlet pressure) –20°C to +95°C (from 8 bar outlet pressure)
FKM	Fluorocarbon	Elastomere moulded diaphragm and seals	–10°C to +120°C (up to 8 bar outlet pressure) –10°C to +95°C (from 8 bar outlet pressure)

NOMINAL DIAMETERS, CONNECTIONS, INSTALLATION DIMENSIONS

Series 682: Connection, installation dimensions, ranges of adjustment

Connection		DN15 PN16 / PN40	DN20 PN16 / PN40	DN25 PN16 / PN40	DN32 PN16 / PN40	DN40 PN16 / PN40	DN50 PN16 / PN40	DN65 PN16	DN65 PN40	DN80 PN16 / PN40	DN100 PN16
Inlet pressure SP, HP up to	bar	16 / 40	16 / 40	16 / 40	16 / 40	16 / 40	16 / 40	16	40	16 / 40	16
Inlet pressure LP up to	bar	16 / 25	16 / 25	16 / 25	16 / 25	16 / 25	16 / 25				
Outlet pressure	bar	0,5 – 2 1 – 8 5 – 15	0,5 – 2 1 – 8 5 – 15	0,5 – 2 1 – 8 5 – 15	0,5 – 2 1 – 8 5 – 15	0,5 – 2 1 – 8 5 – 15	0,5 – 2 1 – 8 5 – 15	1 – 8	1 – 8	1 – 8	1 – 8 5 – 13
Installation dimensions in mm	D	95	105	115	140	150	165	185	185	200	220
	L	130	150	160	180	200	230	290	290	310	350
	H (H1)	102 (128[1])	130 (150[1])	130 (150[1])	130 (150[1])	165 (185[1])	165 (185[1])	235	235	235	320 (340[3])
	H2 (H3)	124 (150[2])	161 (181[2])	161 (181[2])	161 (181[2])	198 (218[2])	198 (218[2])				
	h	46	50	55	68	73	80	89	89	96	112
	K /nxd	65 / 4xM12	75 / 4xM12	85 / 4xM12	100 / 4xM16	110 / 4xM16	125 / 4xM16	145 / 4xM16	145 / 8xM16	160 / 8xM16	180 / 8xM16
Pressure gauge connections											
Inlet pressure	G1							1/4“ radial	1/4“ radial	1/4“ radial	1/4“ axial
Outlet pressure	G1	1/4“ axial	1/4“ axial	1/4“ axial	1/4“ axial	1/4“ axial	1/4“ axial	1/4“ radial	1/4“ radial	1/4“ radial	1/4“ axial
Weight	kg	2,8 (3,1[1])	4,2 (4,6[1])	4,7 (5,1[1])	5,9 (6,3[1])	8,6 (9,3[1])	10,5 (11,2[1])	20	20	22	40 (43[3])
Coefficient of flow K_{vs} [4]	m³/h	3	5,8	6,7	7,6	12,5	15	40	40	50	80

[1]for type 682mGFO-LP
[2]for type 682mGFO-LP S15
[3]for type 682kGFO-HP
[4]The K_{VS} value was determined according to DIN EN 60534-2-3. Instructions on how to determine size and capacity are to be found under section 2.

MAIN DIMENSIONS, INSTALLATION DIMENSIONS

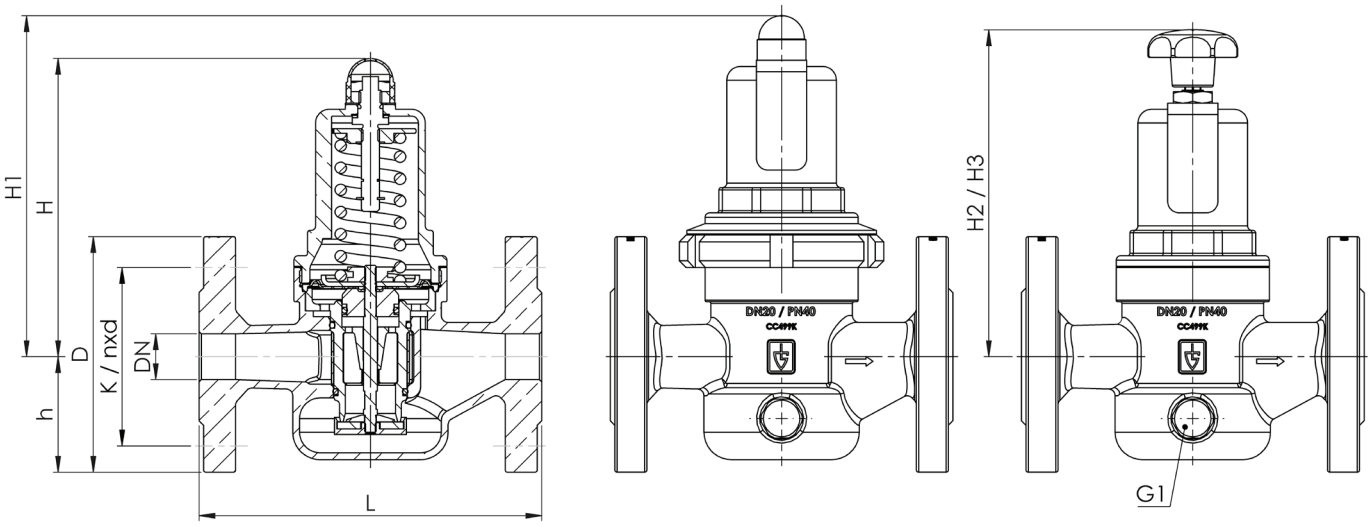

Series 682 ■ INDIVIDUAL SELECTION / VALVE CONFIGURATION

Series	Valve version	Medium	Lifting device	Outlet pressure	Nominal diameter DN	Connection type		Connection size		Seal	Options	Optional: fixed setting	Quan-tity
						Inlet	Outlet	Inlet	Outlet				
682	m	GF	O	*HP*	*50*	FL	FL	*50*	*50*	*EPDM*			*5*
682	k	GF	O	*SP*	*100*	FL	FL	*100*	*100*	*FKM*	*S71*	*7*	*2*
682		GF	O			FL	FL						
682		GF	O			FL	FL						

■ PROPERTIES

S15	Hand wheel (plastic) for tool-free setting of setpressure[1]	☐			☐
S17	Supply with manometers suitable for the valve finish	☐			☐
S71	Preliminary setup for protection against manipulation of the preset pressure (seal)	☐			☐

[1]For nominal diameters DN15 to DN50 outlet pressure ranges LP and SP

■ OPTIONS

GOX	Especially for gaseous O2 applications by employment of specific materials including oil- and grease free production process	☐	P03	Galvanically nickel-plated finish	☐
P01	Oil- and grease-free production	☐	FE	Setting and sealing	☐
P02	Chemically nickel-plated finish	☐			☐

■ CERTIFICATES / APPROVALS

C01	Factory certificate acc. DIN EN 10204 2.2 (WKZ 2.2)	☐	C05	Sealing material Manufacturer certification (FDA, USP 3, 3-A,…), Please indicate description of certificate:.....	☐
C02	Test certificate acc. DIN EN 10204 3.1 (WPZ 3.1)	☐	C06	ATEX evaluation acc. to 2014/34/EU	☐
C03	Material test certificate acc. DIN EN 10204 3.1 (MPZ 3.1) (pressure retaining part)	☐	C10	Certificate of oil- and grease free production	☐
C04	TÜV/DEKRA individual inspection acc. EN 10204 3.2 (TÜV/DEKRA-APZ)	☐			☐

■ ADMISSIONS / ACCREDITATIONS

AA1	EC Type examination acc. to Directive 2014/68/EU	☒	AK1	DNV-GL (DNVGL) type approval	☐
AA4	EAC - certificate/declaration with passport for the valve and laser marking of the valve	☐	AK2	Lloyd's Register (LR) type approval	☐
AB1	Deutscher Verein des Gas- und Wasserfaches, DVGW type approval	☐	AK3	American Bureau of Shipping (ABS) type approval	☐
AB2	Water regulations and advisory scheme WRAS type approval	☐	AK4	Bureau Veritas (BV) type approval	☐
AB3	Attestation de Conformité Sanitaire, ACS type approval	☐	AK5	Russian Maritime Register of Shipping (RMRS) type approval	☐
		☐	AK6	Registro Italiano Navale (RINA) type approval	☐
		☐	AL	Individual inspection by notified body inspector – (body to be indicated):	☐

■ ENQUIRY

Copy and send to: order@goetze-armaturen.de.

Order form easily to be found online under the section for each series.

Series 682:

Dimensioning by pressure loss on the outlet pressure side

Flow chart water

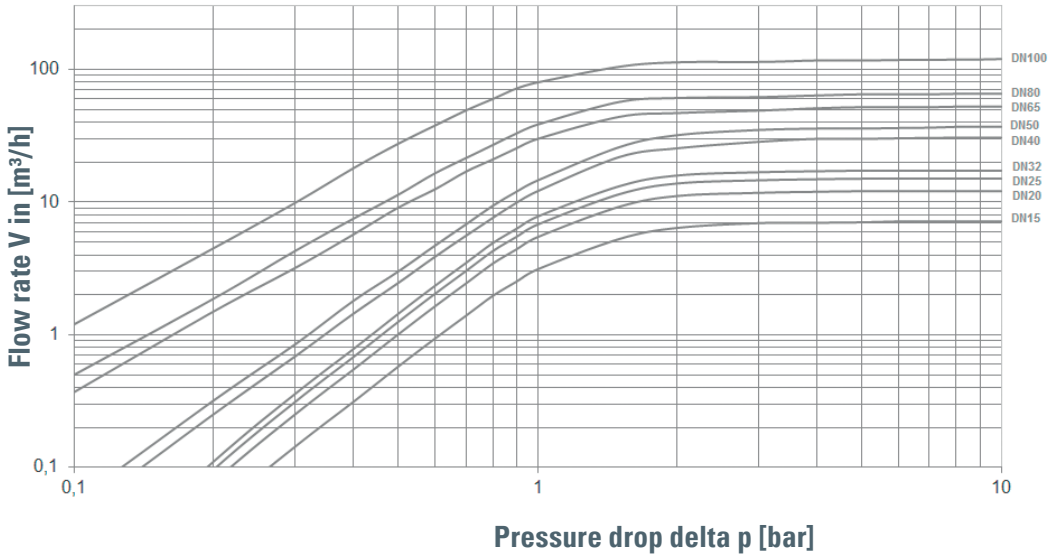

Dimensioning by flow velocity

For liquids:
With help of the chart you can determine the nominal diameter (DN) for a given flow volume V (m³/h). According to DVGW-guidelines (DIN 1988) a flow velocity of 2 m/s in domestic water supply systems should not be exceeded.

For compressed air and other gaseous media:
The usual flow velocity for compressed air is 10 - 20 m/s. For gaseous media the flow volume V should always be shown in actual cubic meters/hour. If the flow volume is given in standard cubic meters, these should be converted into actual cubic meters before using the diagram.

$$V\,(m^3/h) = \frac{V_{Norm}\,(Nm^3/h)}{p_{absolut}\,(bar)} = \frac{V_{Norm}}{p_{ü}+1}$$

Actual cubic meters are based on the prevailing pressure of the medium on the outlet side of the pressure reducer.

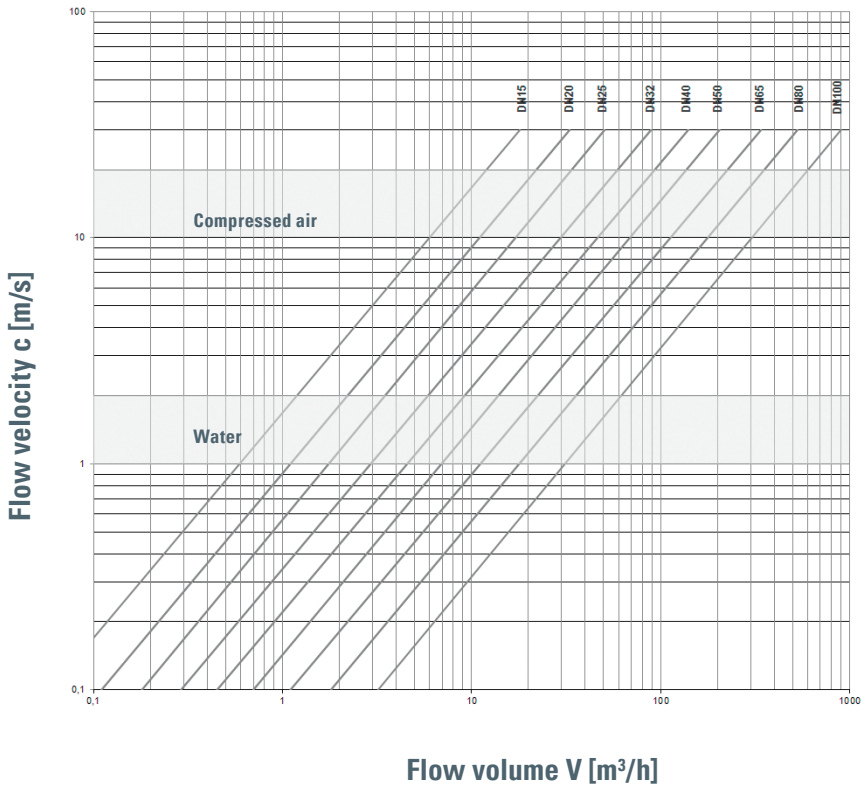

→ Series 683

SUITABLE FOR

Air, gases and vapours neutral

EXAMPLES OF USE

For the protection of:
- commercial and industrial plants
against too high supply pressure.
Pressure reducers are used, if within a piping system despite of varying pressures on the inlet side a certain pressure must not be exceeded on the outlet side.

- compressed air supply plants
- pneumatic control units
- pressure booster plants air-side
- shipbuilding industry and offshore plants

MATERIAL

SPECIFICATION

3/8" – 1 1/4"

– 10°C to + 95°C

Inlet pressure: up to 50 bar
Outlet pressure: 1,5 to 10 bar
depending on version

APPROVALS

European Pressure Equipment Directive

TR ZU 032/2013 - TR ZU 010/2011

Requirements

PED 2014/68/EU

Classification society

Germanischer Lloyd	GL
Lloyd's Register EMEA	LR EMEA
American Bureau of Shipping	ABS
Bureau Veritas	BV
Russian Maritime Register of Shipping	RS

MATERIALS

Component	Material	DIN EN	ASME
Inlet body	Gunmetal	CC499K	CC499K
Outlet body	Gunmetal	CC499K	CC499K
Internal parts	Brass	CW617N	CW617N
Spring	Spring steel	1.1200	ASTM A228

VALVE VERSION

m	with diaphragm	High-quality, heat-resistant moulded elastomere, fabric-reinforced diaphragm. Pressure adjustment by means of spindle. Version completely made of metal. Balanced single seat valve, body with G 1/4" connection for pressure gauge on both sides.

MEDIUM

G	gaseous	Compressed air and neutral gases

TYPE OF LIFTING MECHANISM

O	without lifting device

OUTLET PRESSURE RANGES

SP	Standard version	Inlet pressure: up to 50 bar (size 1 1/4" up to 30 bar) **Largest reduction ratio 10:1**	Outlet pressure: from 1,5 to 10 bar

Fixed setting at a required outlet pressure against surcharge.

AVAILABLE NOMINAL DIAMETERS AND CONNECTION SIZES

Nominal diameter DN	**10**	**15**	**20**	**25**	**32**
Inlet female connection	3/8" (10)	1/2" (15)	3/4" (20)	1" (25)	1 1/4" (32)
Outlet female connection	3/8" (10)	1/2" (15)	3/4" (20)	1" (25)	1 1/4" (32)

TYPE OF CONNECTION INLET / OUTLET THREADED CONNECTIONS

f / f	Standard	Female thread BSP-P /Female thread BSP-P	DIN EN ISO 228-1 / DIN EN ISO 228-1

SEALS

NBR	Nitrile rubber	Elastomere diaphragms and seals	–10°C to +95°C

OPTIONS

Against surcharge	
Pressure gauges 36 and 40	Chapter Accessories

NOMINAL DIAMETERS, CONNECTIONS, INSTALLATION DIMENSIONS

Series 683: Connection, installation dimensions, ranges of adjustment						
Nominal diameter	**DN**	**10**	**15**	**20**	**25**	**32**
Connection DIN EN ISO 228	**G**	3/8" (10)	1/2" (15)	3/4" (20)	1" (25)	1 1/4" (32)
Inlet pressure to	**bar**	50	50	50	50	30
Outlet pressure[1]	**bar**	1,5-10	1,5-10	1,5-10	1,5-10	1,5-10
Installation dimensions in mm	**L**	73	73	70	87	100
	H	100	100	120	165	175
	h	22	22	30	35	43
	SW1	27	27	36	44	54
	SW2	27	27	32	40	49
Weight	**kg**	0,5	0,5	0,8	1,4	2,0

[1]Largest reduction ratio 10:1

MAIN DIMENSIONS, INSTALLATION DIMENSIONS

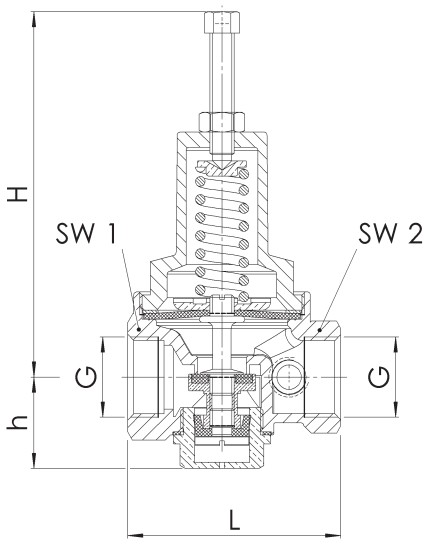

INDIVIDUAL SELECTION / VALVE CONFIGURATION

Series	Valve version	Medium	Lifting device	Outlet pressure	Nominal diameter DN	Connection type		Connection size		Seal	Options	Optional: fixed setting	Quantity
						Inlet	Outlet	Inlet	Outlet				
683	**m**	**G**	**O**	**SP**	*20*	**f**	**f**	*20*	*20*	**NBR**	*Pressure Gauge 36*		*5*
683	**m**	**G**	**O**	**SP**	*32*	**f**	**f**	*32*	*32*	**NBR**		*4,0*	*1*
683	**m**	**G**	**O**	**SP**		**f**	**f**			**NBR**			
683	**m**	**G**	**O**	**SP**		**f**	**f**			**NBR**			

Series 683:

Determination of the size and capacity

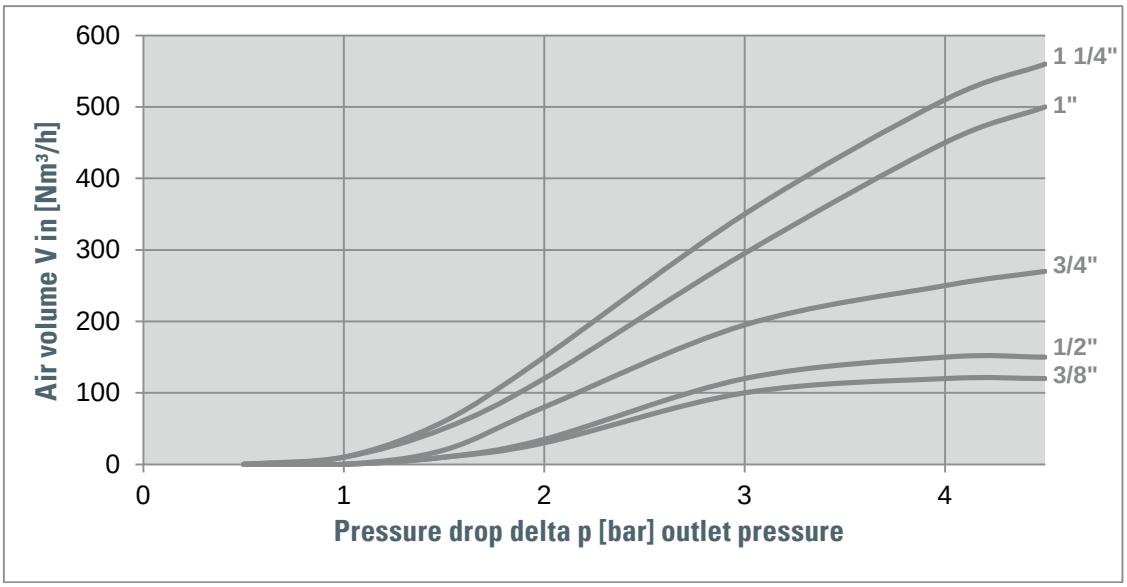

→ Series 484

484

Pressure reducing valves made of stainless steel with female threaded connections

SUITABLE FOR

Liquids	neutral and non-neutral
Air, gases and vapours	neutral and non-neutral

EXAMPLES OF USE

For the protection of:
- commercial and industrial plants
against too high supply pressure.
Use of pressure reducing valves, when in a piping system inspite of varying pressures on the inlet side a specific pressure on the outlet side must be kept.

- Compressed air supply plants
- Pneumatic control units
- Pressure booster plants air-side
- Shipbuilding industry and offshore plants
- Industrial gas plant construction
- PET blow moulding machines
- Blasting plants

MATERIAL

SPECIFICATION

1/4" – 2"

– 40°C to + 120°C depending on version

Inlet pressure: up to 60 bar
Outlet pressure: 0,5 to 50 bar
depending on version

APPROVALS

European Pressure Equipment Directive

TR ZU 032/2013 - TR ZU 010/2011

Requirements

PED 2014/68/EU

Classification society

Lloyd's Register EMEA	LR EMEA
Bureau Veritas	BV
Russian Maritime Register of Shipping	RS

MATERIALS

Component	Material	DIN EN	ASME
Inlet body	Stainless steel	1.4408	CF8M
Outlet body	Stainless steel	1.4408	CF8M
Internal parts	Stainless steel	1.4404	316 L
Spring	Stainless steel	1.4568	631

m	with diaphragm	High-quality heat-resistant elastomere, fabric reinforced diaphragm. Adjustment by means of non-rising spindle. Balanced single seat valve, pressure gauge connection G1/4“ on both sides of body. Please take note of the outlet pressure range.
k	with piston	Stainless steel piston with seal and support ring. Adjustment by means of non-rising spindle. Balanced single seat valve, pressure gauge connection G1/4“ on both sides of body. Please take note of the outlet pressure ranges.

■ MEDIUM

GS	gaseous with secondary venting	Compressed air and gases. Non-neutral, poisonous gases only in combination with ducted exhaust.
GFO	gaseous and liquid without secondary venting	for water and non-sticking liquids, compressed air and gases

■ OUTLET PRESSURE RANGES

SM	Standard version with diaphragm	Inlet pressure: up to 60 bar	Outlet pressure: 0,5 to 15 bar
SK **HK**	Standard version with piston High-pressure version with piston	Inlet pressure: up to 60 bar Inlet pressure: up to 60 bar	Outlet pressure: 5 to 30 bar Outlet pressure: 10 to 50 bar
Fixed setting at a required outlet pressure against surcharge			

■ AVAILABLE NOMINAL DIAMETERS AND CONNECTION SIZES

Nominal diameter DN	**8**	**10**	**15**	**20**	**25**	**40**	**50**
Inlet female connection	1/4“ (8)	3/8“ (10)	1/2“ (15)	3/4“ (20)	1“ (25)	1 1/2“ (40)	2“ (50)
Outlet female connection	1/4“ (8)	3/8“ (10)	1/2“ (15)	3/4“ (20)	1“ (25)	1 1/2“ (40)	2“ (50)

■ TYPE OF CONNECTION INLET / OUTLET THREADED CONNECTIONS

f / f	Standard	Female thread BSP-P / Female thread BSP-P	DIN EN ISO 228-1 / DIN EN ISO 228-1

■ SEALS

FKM	Fluorocarbon	Elastomere moulded diaphragm and seals	–10°C to +120°C
EPDM	Ethylene propylene diene	Elastomere moulded diaphragm and seals	–40°C to +120°C

■ OPTIONS AGAINST SURCHARGE

Pressure gauges 40, 42, 44, 45, 46 and 47	Chapter Accessories
GA: ducted exhaust air in case of medium GS (specific ducting of secondary venting)	
GA - SV	Cutting ring threaded connection according to EN ISO 8434-1 for pipe diameter 6mm.
GA - CK	CK-Quick connector for pipe diameter 6mm up to 10 bar.
Wall mount	Order code: 484 Wall mount -DN
Service parts:	
Service Pack (seals and disc) 484 piston version **k**; FKM or EPDM	Order code: 484k-DN... <FKM or EPDM> Service Pack
Service Pack (seals and disc) 484 diaphragm version **mGS**; FKM or EPDM	Order code: 484mGS-DN... <FKM or EPDM> Service Pack
Service Pack (seals and disc) 484 diaphragm version **mGFO**; FKM or EPDM	Order code: 484mGFO-DN... <FKM or EPDM> Service Pack

NOMINAL DIAMETERS, CONNECTIONS, INSTALLATION DIMENSIONS

Series 484: Connection, installation dimensions, ranges of adjustment								
Nominal diameter	DN	8	10	15	20	25	40	50
Connection DIN EN ISO 228	G	1/4“ (8)	3/8“ (10)	1/2“ (15)	3/4“ (20)	1“ (25)	1 1/2“ (40)	2“ (50)
Inlet pressure up to	bar	60	60	60	60	60	60	60
Outlet pressure: SM	bar	0,5-15	0,5-15	0,5-15	0,5-15	0,5-15	0,5-15	0,5-15
SK	bar	5-30	5-30	5-30	5-30	5-30	5-30	5-30
HK	bar	10-50	10-50	10-50	10-50	10-50	10-50	10-50
Installation dimensions in mm	L	68	68	60	78	102	136	136
	H	120	120	120	180	215	260	270
	h	33	33	33	40	56	63	70
	SW	26	26	26	32	44	58	70
Ducted exhaust connection	D	M5	M5	M5	M5	1/8“	1/8“	1/8“
Dimensions of optional wall mount	L1	38	38	38	51	61	85	85
	H1 / H2	18 / 62	18 / 62	18 / 62	18/58	22 / 80	15	15
	B / B1	5,5	5,5	5,5	6,5	8,5	10,5 / 90	10,5 / 90
Weight	kg	1,1	1,1	1,1	2,5	4,5	8,1	8,8
Coefficient of flow K_{VS}	m³/h	1,6	1,6	1,6	3,4	5,5	12,7	12,7

The K_{VS} value was determined according to DIN EN 60534-2-3. Instructions on how to determine size and capacity are to be found under section 2.

MAIN DIMENSIONS, INSTALLATION DIMENSIONS

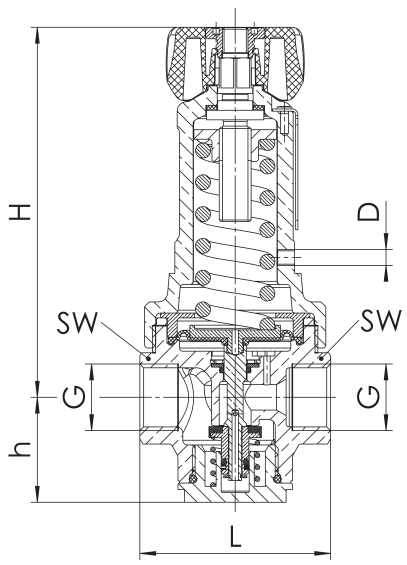

Options

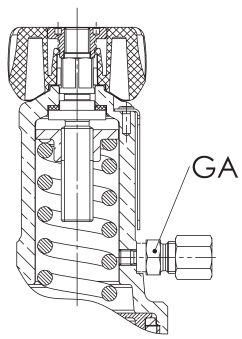

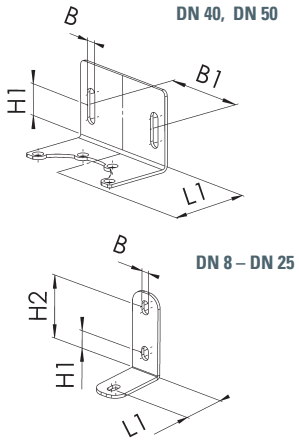

INDIVIDUAL SELECTION / VALVE CONFIGURATION

Series	Valve version	Medium	Outlet pressure	Nominal diameter DN	Connection type		Connection size		Seal	Option	Optional feature	Quantity
					Inlet	Outlet	Inlet	Outlet				
484	*m*	*GS*	*SM*	*20*	f	f	*20*	*20*	*FKM*	*Pressure Gauge 40*	*GA-SV*	*5*
484	*k*	*GFO*	*SK*	*40*	f	f	*40*	*40*	*EPDM*			*1*
484					f	f						
484					f	f						

→ Series 684

684

Pressure reducing valves made of gunmetal with female threaded connections

SUITABLE FOR

Liquids	neutral and non-neutral	
Air, gases and vapours	neutral and non-neutral	

EXAMPLES OF USE

For the protection of:
- commercial and industrial plants

against too high supply pressure.
Use of pressure reducing valves, when in a piping system inspite of varying pressures on the inlet side a specific pressure on the outlet side must be kept.

- Compressed air supply plants
- Pneumatic control units
- Pressure booster plants air-side
- Shipbuilding industry and offshore plants
- Industrial gas plant construction
- PET blow moulding machines
- Blasting plants

MATERIAL

SPECIFICATION

1/4" – 2"

– 40°C to + 120°C depending on version

Inlet pressure: up to 60 bar
Outlet pressure: 0,5 to 50 bar
depending on version

APPROVALS

European Pressure Equipment Directive

TR ZU 032/2013 - TR ZU 010/2011

Requirements

PED 2014/68/EU

Classification society

Germanischer Lloyd	GL
Lloyd's Register EMEA	LR EMEA
Bureau Veritas	BV
Russian Maritime Register of Shipping	RS

MATERIALS

Component	Material	DIN EN	ASME
Inlet body	Gunmetal	CC499K	CC499K
Outlet body	Gunmetal	CC499K	CC499K
Internal parts	Brass	CW617N	CW617N
Spring	Spring steel with anti-rust protection	1.1200	ASTM A228

Series 684 ■ VALVE VERSION

m	with diaphragm	High-quality heat-resistant elastomere, fabric reinforced diaphragm. Adjustment by means of non-rising spindle. Balanced single seat valve, pressure gauge connection G1/4“ on both sides of body. Please take note of the outlet pressure range.
k	with piston	Brass piston with seal and support ring. Adjustment by means of non-rising spindle. Balanced single seat valve, pressure gauge connection G1/4“ on both sides of body. Please take note of the outlet pressure ranges.

■ MEDIUM

GS	gaseous with secondary venting	Compressed air and gases. Non-neutral, poisonous gases only in combination with ducted exhaust.
GFO	gaseous and liquid without secondary venting	for water and non-sticking liquids, compressed air and gases

■ OUTLET PRESSURE RANGES

SM	Standard version with diaphragm	Inlet pressure: up to 60 bar	Outlet pressure: 0,5 to 15 bar
SK **HK**	Standard version with piston High-pressure version with piston	Inlet pressure: up to 60 bar Inlet pressure: up to 60 bar	Outlet pressure: 5 to 30 bar Outlet pressure: 10 to 50 bar
Fixed setting at a required outlet pressure against surcharge			

■ AVAILABLE NOMINAL DIAMETERS AND CONNECTION SIZES

Nominal diameter DN	**8**	**10**	**15**	**20**	**25**	**40**	**50**
Inlet female connection	1/4“ (8)	3/8“ (10)	1/2“ (15)	3/4“ (20)	1“ (25)	1 1/2“ (40)	2“ (50)
Outlet female connection	1/4“ (8)	3/8“ (10)	1/2“ (15)	3/4“ (20)	1“ (25)	1 1/2“ (40)	2“ (50)

■ TYPE OF CONNECTION INLET / OUTLET THREADED CONNECTIONS

f / f	Standard	Female thread BSP-P / Female thread BSP-P	DIN EN ISO 228-1 / DIN EN ISO 228-1

■ SEALS

FKM	Fluorocarbon	Elastomere moulded diaphragm and seals	–10°C to +120°C
EPDM	Ethylene propylene diene	Elastomere moulded diaphragm and seals	–40°C to +120°C

■ OPTIONS AGAINST SURCHARGE

Pressure gauge 40, 42, 44, 45, 46 and 47	Chapter Accessories
GA: ducted exhaust air in case of medium GS (specific ducting of secondary venting)	
GA - SV	Cutting ring threaded connection according to EN ISO 8434-1 for pipe diameter 6mm.
GA - CK	CK-Quick connector for pipe diameter 6mm up to 10 bar.
Wall mount	Order code: 684 Wall mount -DN
Service parts:	
Service Pack (seals and disc) 684 piston version **k**; FKM or EPDM	Order code: 684k-DN... <FKM or EPDM> Service Pack
Service Pack (seals and disc) 684 diaphragm version **mGS**; FKM or EPDM	Order code: 684mGS-DN... <FKM or EPDM> Service Pack
Service Pack (seals and disc) 684 diaphragm version **mGFO**; FKM or EPDM	Order code: 684mGFO-DN... <FKM or EPDM> Service Pack

NOMINAL DIAMETERS, CONNECTIONS, INSTALLATION DIMENSIONS

Series 684: Connection, installation dimensions, ranges of adjustment								
Nominal diameter	DN	8	10	15	20	25	40	50
Connection DIN EN ISO 228	G	1/4" (8)	3/8" (10)	1/2" (15)	3/4" (20)	1" (25)	1 1/2" (40)	2" (50)
Inlet pressure up to	bar	60	60	60	60	60	60	60
Outlet pressure: SM	bar	0,5-15	0,5-15	0,5-15	0,5-15	0,5-15	0,5-15	0,5-15
SK	bar	5-30	5-30	5-30	5-30	5-30	5-30	5-30
HK	bar	10-50	10-50	10-50	10-50	10-50	10-50	10-50
Installation dimensions in mm	L	68	68	60	78	102	136	136
	H	120	120	120	180	215	260	270
	h	33	33	33	40	56	63	70
	SW	26	26	26	32	44	58	70
Ducted exhaust connection	D	M5	M5	M5	M5	1/8"	1/8"	1/8"
Dimensions of optional wall mount	L1	38	38	38	51	61	85	85
	H1 / H2	18 / 62	18 / 62	18 / 62	18/58	22 / 80	15	15
	B / B1	5,5	5,5	5,5	6,5	8,5	10,5 / 90	10,5 / 90
Weight	kg	1,2	1,2	1,2	2,8	5,3	9,4	10,2
Coefficient of flow K_{VS}	m^3/h	1,6	1,6	1,6	3,4	5,5	12,7	12,7

The K_{VS} value was determined according to DIN EN 60534-2-3. Instructions on how to determine size and capacity are to be found under section 2.

MAIN DIMENSIONS, INSTALLATION DIMENSIONS

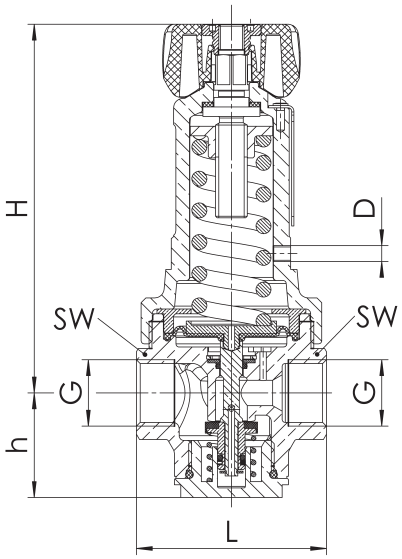

Options

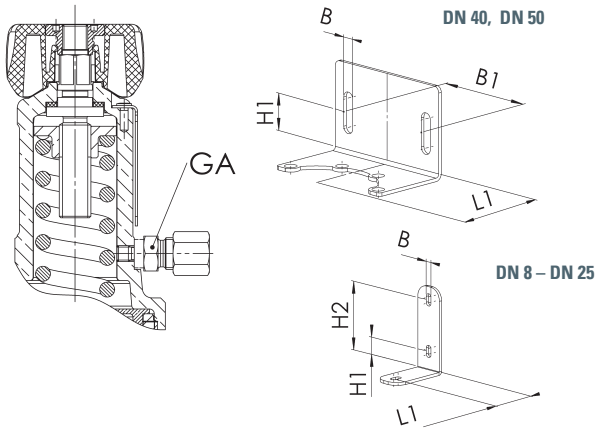

INDIVIDUAL SELECTION / VALVE CONFIGURATION

Series	Valve version	Medium	Outlet pressure	Nominal diameter DN	Connection type		Connection size		Seal	Option	Optional feature	Quantity
					Inlet	Outlet	Inlet	Outlet				
684	*m*	*GS*	*SM*	*20*	f	f	*20*	*20*	*FKM*	*Pressure Gauge 40*	*GA-SV*	*5*
684	*k*	*GFO*	*SK*	*40*	f	f	*40*	*40*	*EPDM*			*1*
684					f	f						
684					f	f						